Z1 VQ40 PLENUM SPACER INSTALLATION MANUAL

This Installation Manual is intended for the following models:	
2005-2015	Nissan Xterra
2005-2019	Nissan Frontier 4.0L
2005-2012	Nissan Pathfinder 4.0L

PROLOGUE:
Study these instructions completely before proceeding to assembly. The installer must have a thorough knowledge of automotive systems operation. If unfamiliar with any of the concepts outlined in this instruction, we recommend the installation be completed by a qualified professional.

WARNING!
Extreme caution should be taken when performing maintenance or performance upgrades to your vehicle. Please observe and abide by any Warning or Caution labels placed on the various components and tools used when servicing your vehicle. If you have any questions regarding installation or the various components included with the Z1 Off-Road VQ40 Plenum Spacer, consult with a Professional Mechanic or contact Z1 Off-Road for more information.

PARTS INCLUDED:

Item	Quantity	Description
1	1	VQ40 Plenum Spacer
2	7	M6 x 1.0 Flanged Bolt, 65mm
3	3	Upper Plenum Gasket
4	1	Manifold Support Bracket
5	4	M8 x 1.25 Flanged Bolt, 16mm

TOOLS REQUIRED:

- Ratchet
- Ratchet Extension(s)
- E6-Torx Bit (external star)
- Flat-head Screwdriver
- 10mm Socket/Wrench
- 12mm Socket/Wrench
- Pliers

SAFETY REQUIREMENTS:

- Always wear safety glasses and any necessary protective garments. If using any fluids, chemicals, or solvents, a respirator is recommended.
- Always use properly rated jack stands when working under your vehicle.
- Always keep limbs and parts away from moving drivetrain parts.
- Only operate drivetrain in safe space and well-ventilated areas.

BEFORE YOU BEGIN:

Remove contents from the Z1 Off-Road VQ40 Plenum Spacer Kit and verify that ALL necessary hardware is present.

PROCEDURE:

1. Turn the car's ignition to the OFF position and disconnect the **NEGATIVE (-)** battery terminal.

2. Place the transmission in Park position (or in Reverse gear if equipped with a manual transmission). Apply the parking brake.

3. Open and support the hood of the vehicle.

4. Remove the Engine Cover if applicable.

5. Disconnect the PCV Hose connecting to the Air Intake Tube.

6. Loosen the (2) two hose clamps and remove the (2) two bolts on Air Intake Tube (circled below). Remove Air Intake Tube and set aside. *Figure 1.*

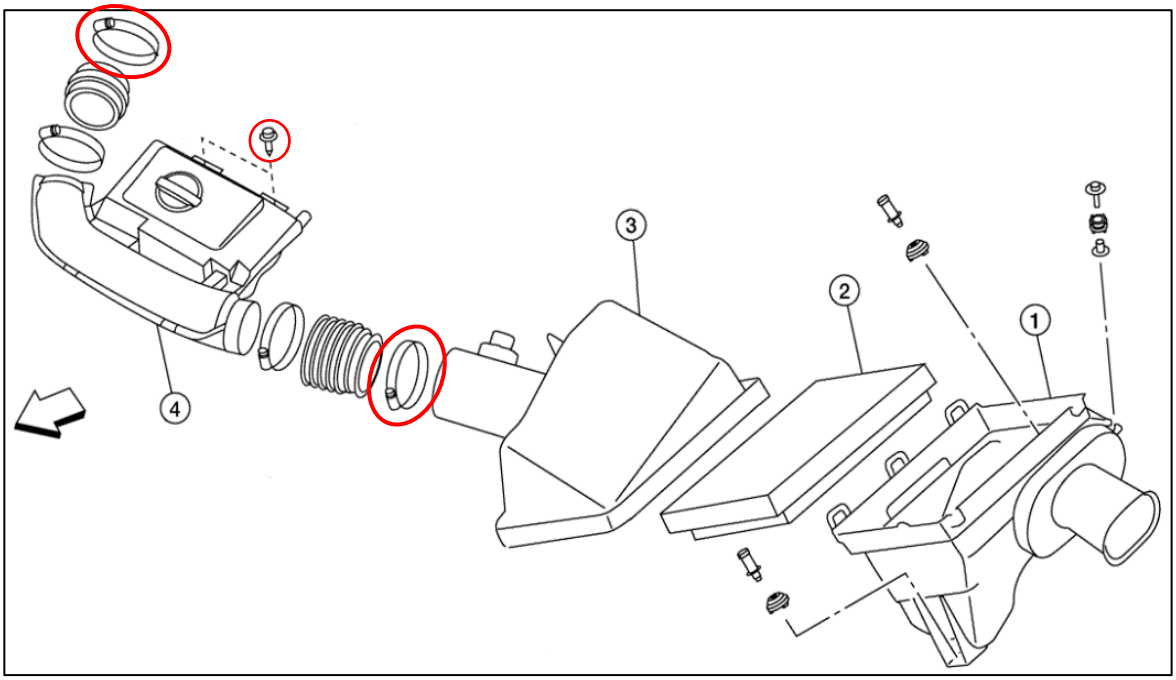

Figure 1

Use *Figure 2* below as reference for the following steps:

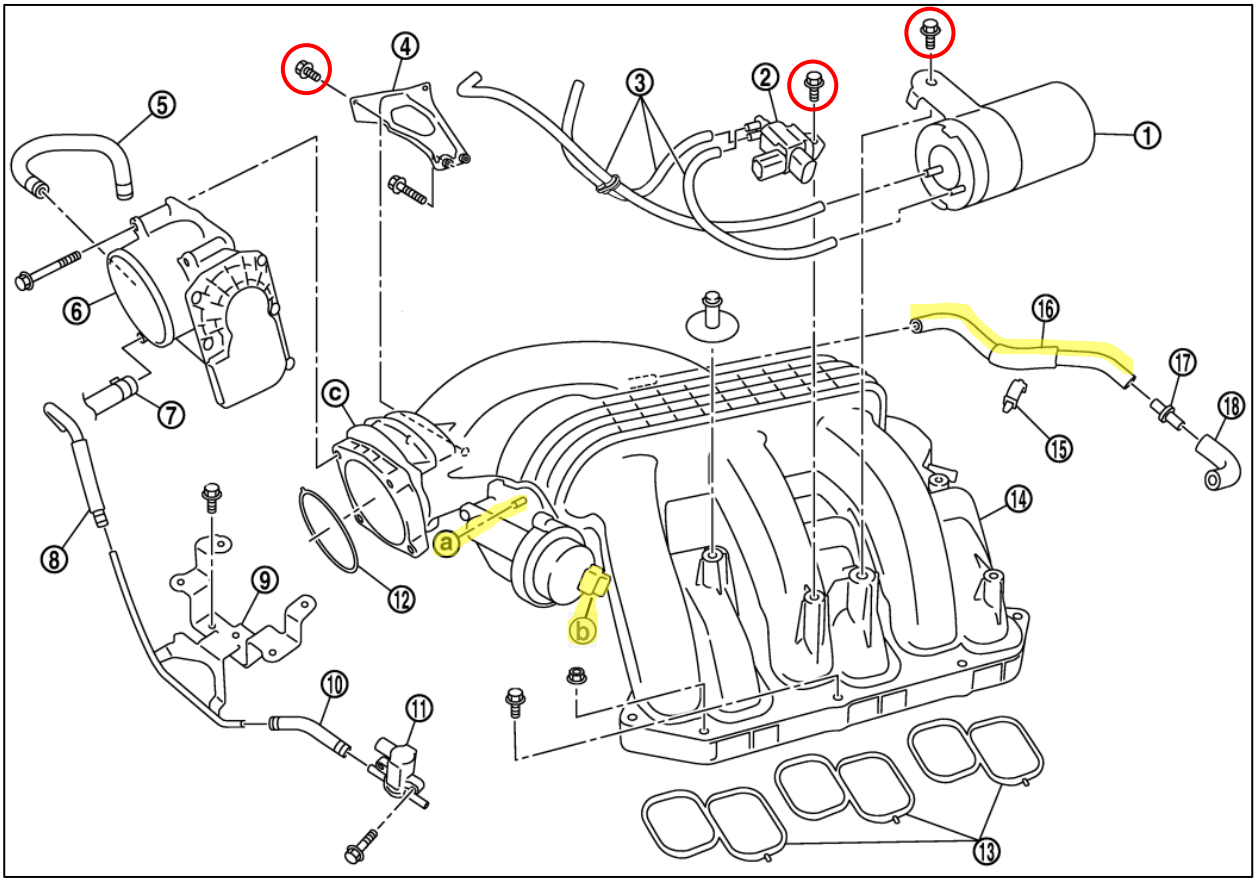

Figure 2

7. Remove the (2) two bolts on the Intake Manifold Support Bracket ④ securing it to the Intake Manifold, circled above in *Figure 2.*

8. Remove the (2) two bolts securing the VIAS control solenoid valve ② and vacuum tank ① to the Intake Manifold, circled above in *Figure 2.*

9. Remove the EVAP hose ⓐ & ⓑ from the front of the Intake Manifold, highlighted above in *Figure 2.*

   NOTE: Take note of where each hose was connected to not mix them up when reinstalling.

10. Remove the PCV Hose ⑯ from the left side of the Intake Manifold, highlighted above in *Figure 2.*

    NOTE: This step is optional, as the manifold will lift up enough to slide the Z1 Intake Manifold Spacer in without removing this hose. However, if you would like to completely remove the Intake Manifold, this hose must be removed first.

11. Disconnect the Electrical Connector at the back of the Intake Manifold. *Figure 3.*

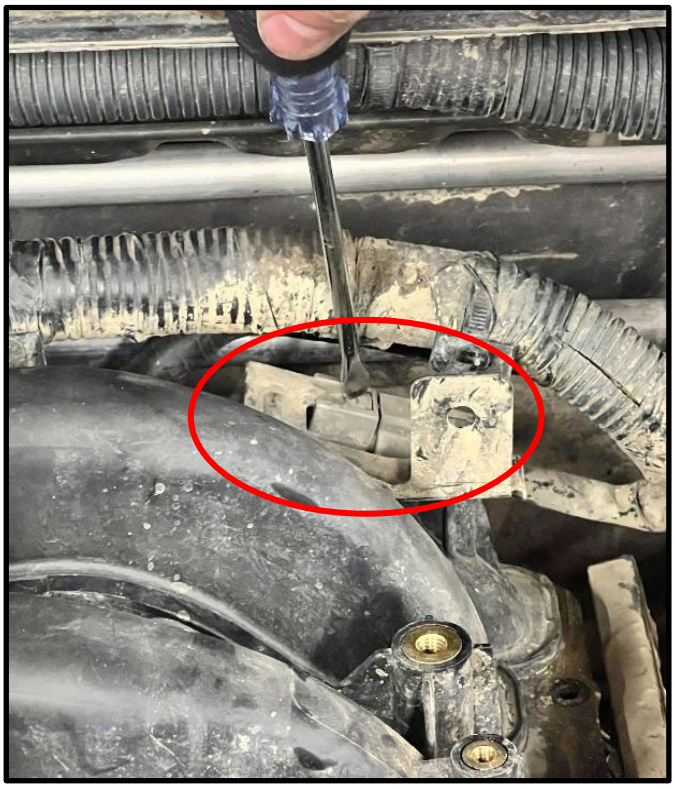

Figure 3

12. Use Pliers and remove the (2) two clips holding the large wiring harness to the bracket at the back of the Intake Manifold. *Figure 4.*

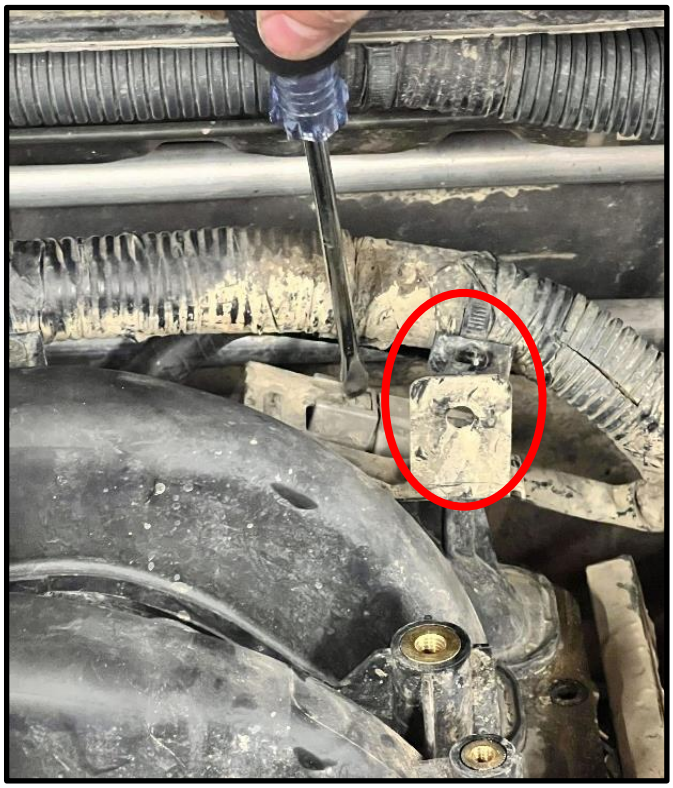

Figure 4

13. Remove the (1) one bolt securing the bracket from the previous step to the Intake Manifold.

14. Loosen the (7) seven nuts and bolts on the Intake Manifold in reverse order as shown in *Figure 5* below.

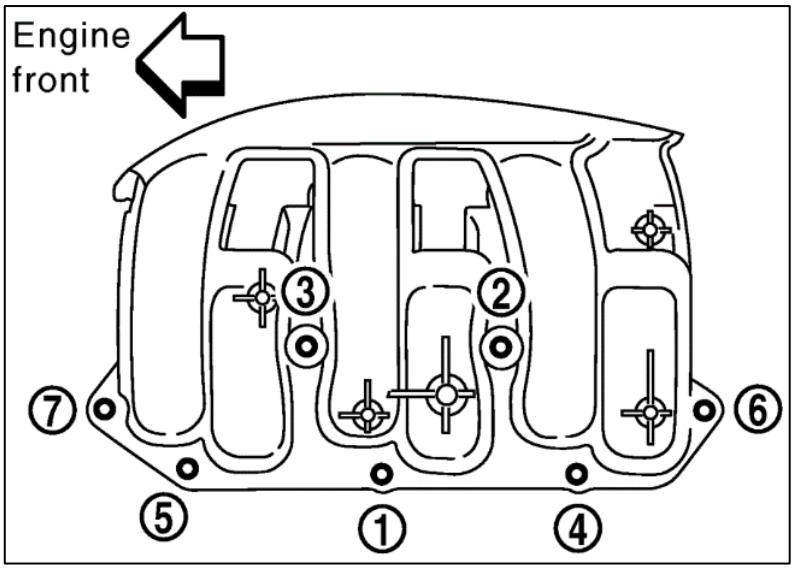

Figure 5

15. Use an E-6 Torx bit and remove the (2) two studs from the Intake Manifold.

16. Locate the Z1 Intake Manifold Spacer (IMS) and the (3) three Upper Plenum Gaskets.

17. Install the Upper Plenum Gaskets into the Z1 Intake Manifold Spacer. *Figure 6.*

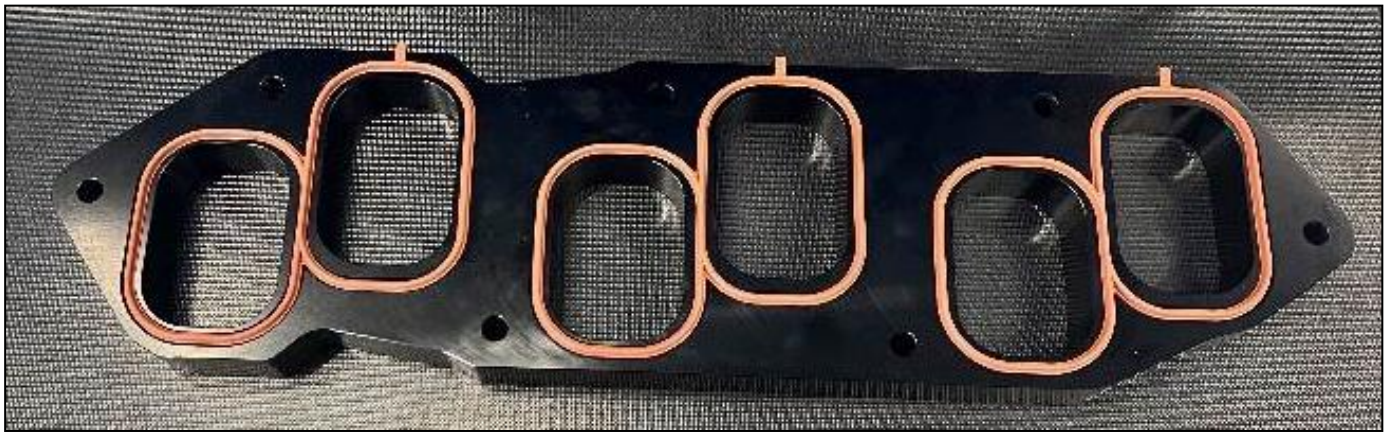

Figure 6

18. Carefully lift up on the Intake Manifold if and rotate up and out of the way if not completely removed to provide room to slide the Z1 IMS into place.

    <u>NOTE</u>: Be careful as the Intake Runners are open, and debris or tools can fall into the engine.

19. Position the Z1 IMS between the Upper and Lower Intake Manifolds, making sure the gaskets are in place on both sides. If you are changing the Lower Intake Gasket, now would be the time.

    NOTE: The Z1 Off-Road Logo will be on front right side and visible from the front of the vehicle. *Figure 7.*

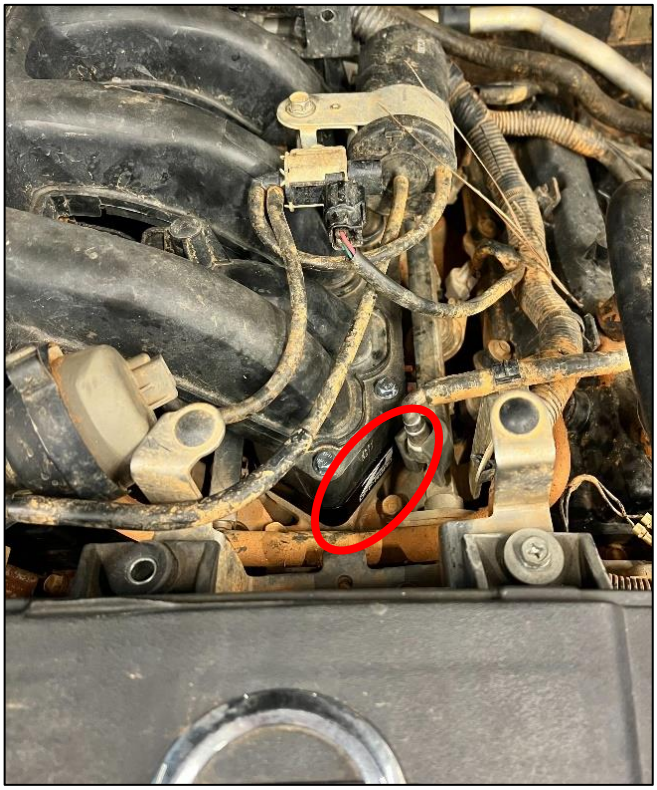

Figure 7

20. Use the (7) seven supplied M6 Bolts, secure the Upper Intake Plenum to the Lower Intake Plenum through the Z1 Intake Manifold Spacer. Torque the bolts in numerical order as shown below in *Figure 8.*
    Torque to **8 ft-lbs** or **61 in-lbs**.

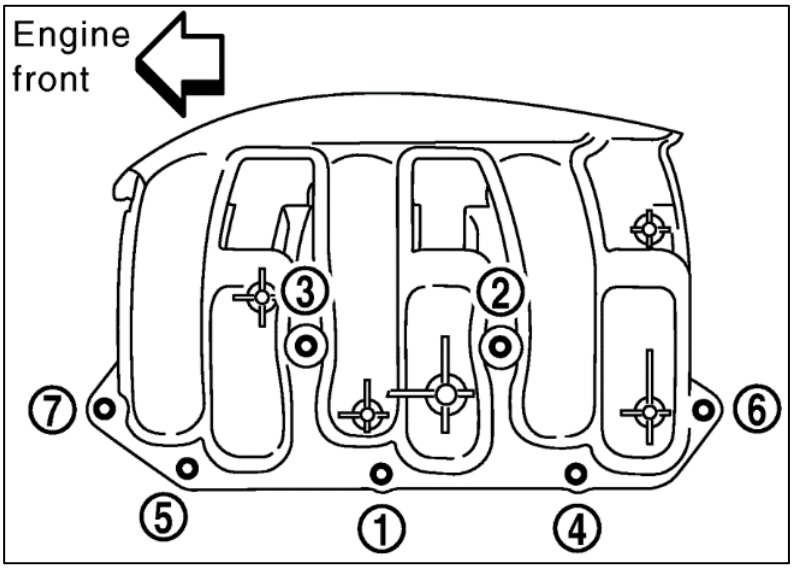

Figure 8

21. Follow *Steps 5-13* in reverse order to reinstall all previously removed components, except the OE Intake Manifold Support Bracket, which will be installed in the next Step.

22. Locate the Z1 Intake Manifold Support Bracket and the (4) four M8 Flanged Bolts. Secure the bottom of the Z1 Support Bracket to the OE Support Bracket disconnected in *Step* 7 using (2) two M8 Bolts. Use the other (2) two M8 Bolts to secure the top of the Z1 Support Bracket to the Intake Manifold. Torque the M8 bolts to **15 ft-lbs.** *Figure 9.*

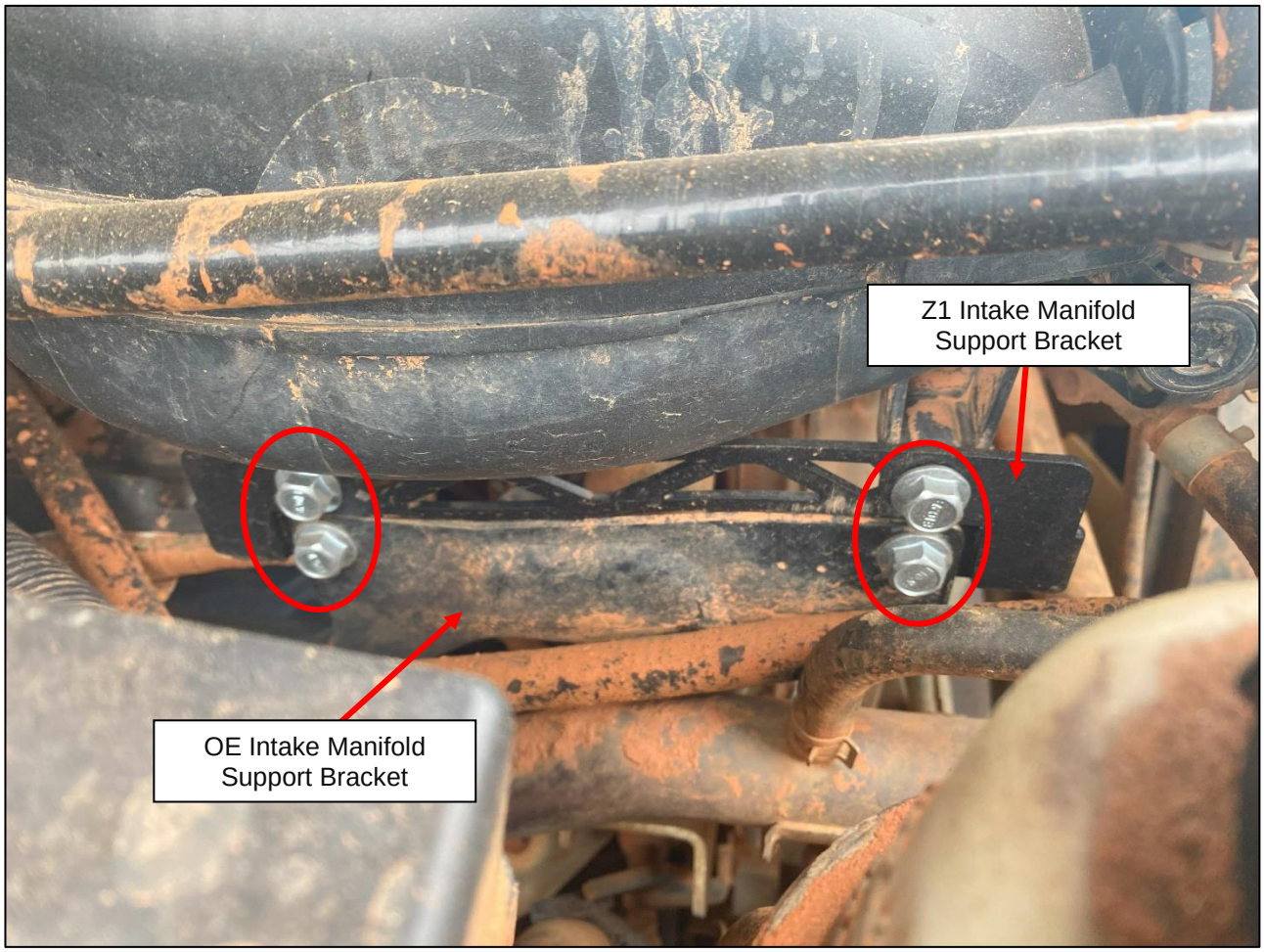

Figure 9

23. Start vehicle. While at idle check for any leaks or faulty operation of the Z1 VQ40 Intake Manifold Spacer.

24. Lower hood of vehicle.

25. Perform a final test drive of vehicle.

END

Additional Technical Support:
Contact Z1 Off-Road at info@z1offroad.com
Or call 678-839-8019 between 9am and 6pm ET