GENUINE PARTS

INSTALLATION INSTRUCTIONS

DESCRIPTION:	Sport Bar with UT Attachment
APPLICATION:	Frontier
PART NUMBER:	T99Y4 9BU25

KIT CONTENTS:

Item	Qty.	Part Description	Service Part Number
A	1	Sport Bar Assembly	
B	1	Front Left Bracket	
C	1	Front Right Bracket	
D	2	Front Foam	
E	2	Rear Foam	
F	2	Universal Rear Mount	
G	8	M6 Screw 25mm	
H	4	M8 Screw 20mm	
I	4	M6 U-Clip	
J	2	M8 Screw 60mm	
K	2	M8 Threaded Plate	
L	1	Adhesive Tape	
M	30	Zip Ties	
N	1	Primary Harness	

A

B

C

D

E

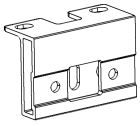
F

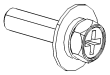
G

H

I

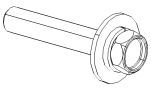
J

K

L

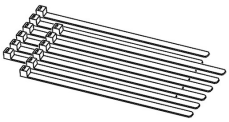
M

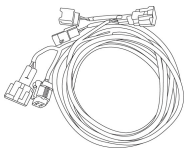
N

TOOLS REQUIRED:

- Torx bit T30
- Torque wrench capacity to 10 Nm (90 in-lb)
- Tape measure
- Small flat head screwdriver
- #3 Philips Screwdriver

PRE-INSTALLATION WARNINGS, CAUTIONS, CRITICAL STEPS, and NOTES:

⚠ CAUTION

- **Prior to driving vehicle ensure that third brake light/bed light is connected and functioning properly. When the Sport Bar is properly installed, the standard third brake light will continue to function. However, the brake light included in Sport Bar assembly will function as the primary third brake light and therefore must be tested prior to driving.**
- **Sport Bar is intended for appearance only and not to bear loads. Off road lights can be added to top plate. Ensure that Off road lights are securely fastened prior to driving.**
- **Sport Bar is not intended to be used as a tie down device. Do not use the Sport Bar assembly to tie down loads of any kind.**
- **During installation, take precautions to prevent scratching or damaging the vehicle.**
- **Perform installation in a spacious area to allow opening and closing the vehicle doors.**
- **Read entire instruction procedure prior to installing Sport Bar.**
- **Two persons are required for proper installation.**

Section 1: SPORT BAR INSTALLATION PROCEDURE

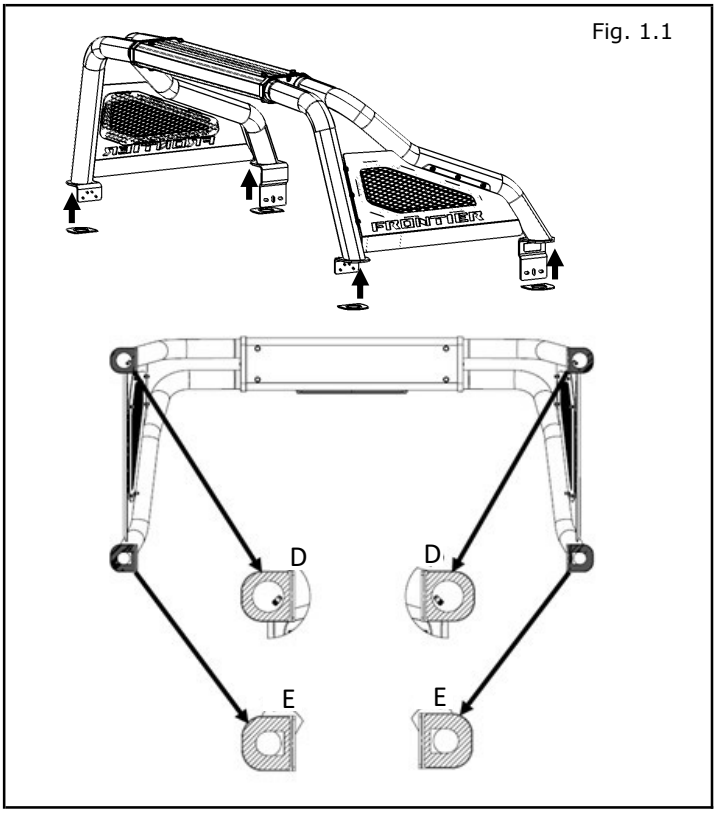

Fig. 1.1

1.1) Remove main assembly (item A) from box. Apply two front foam (Item D) and two rear foam (Item E) pieces to underside of main assembly (Item A) feet.

a) Apply uniform pressure to all of foam

Note:

For front driver foam (item D) thread the harness through, then expose adhesive back.

For front foam (item D) and rear foam (item E) placement; align straight side with inner flanges

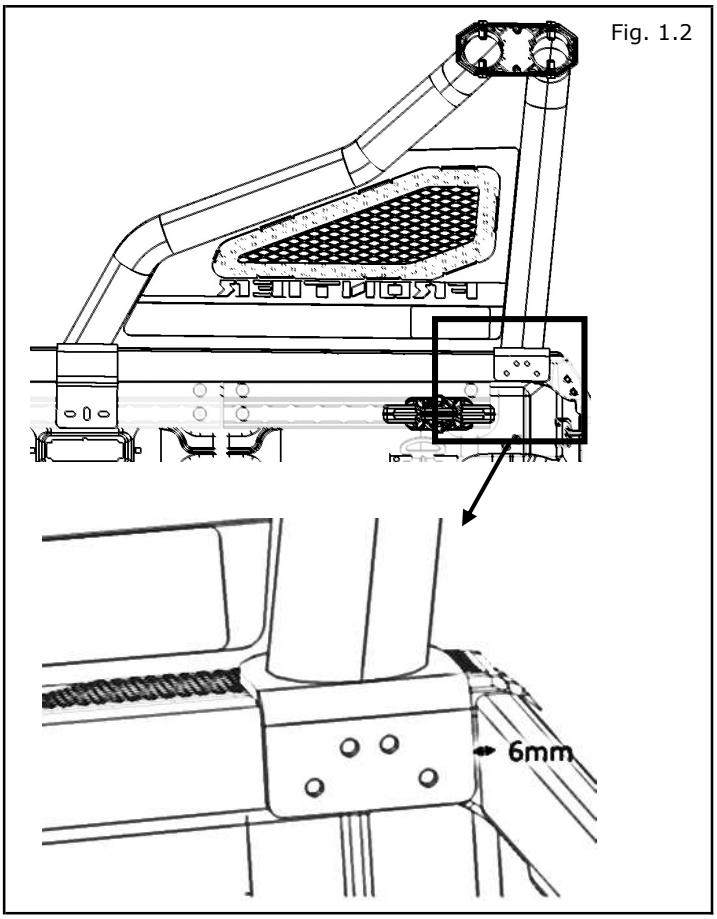

Fig. 1.2

1.2) Place Assembly on Vehicle

As a team, lift and place assembly on truck bed as shown, being careful not to trap the harness under the front driver side mounting foot.

Locate the assembly by measuring 6±0.5mm from the Headboard on both sides as shown in Fig.1.2.

Note: Section view of passenger side shown for clarity

INSTALLATION PROCEDURE:

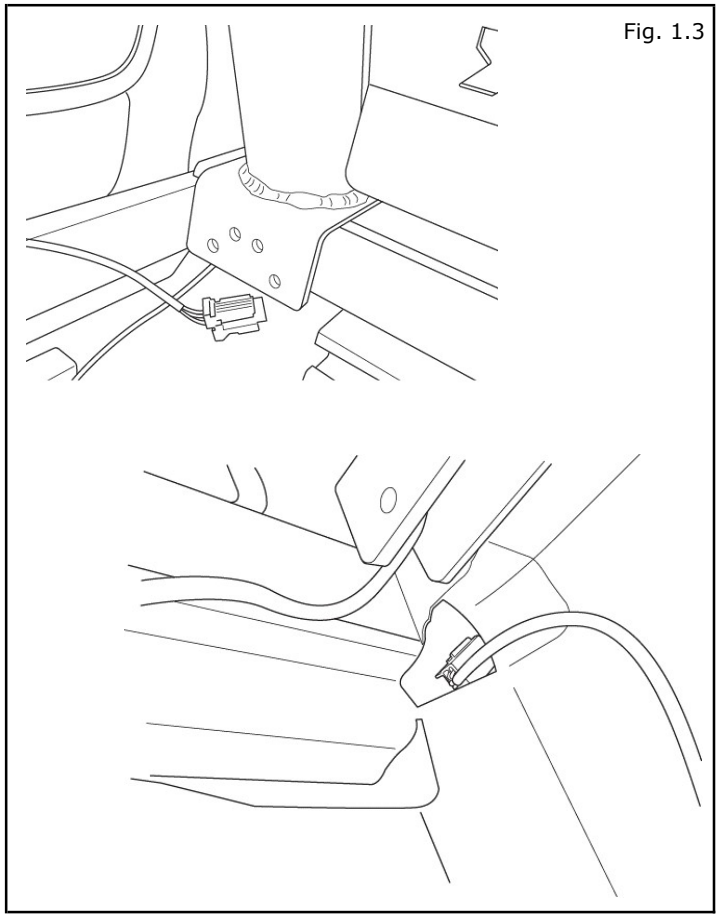
Fig. 1.3

1.3) Route Harness

Feed the 3 pin connector through the rat hole as shown in Fig. 1.3.

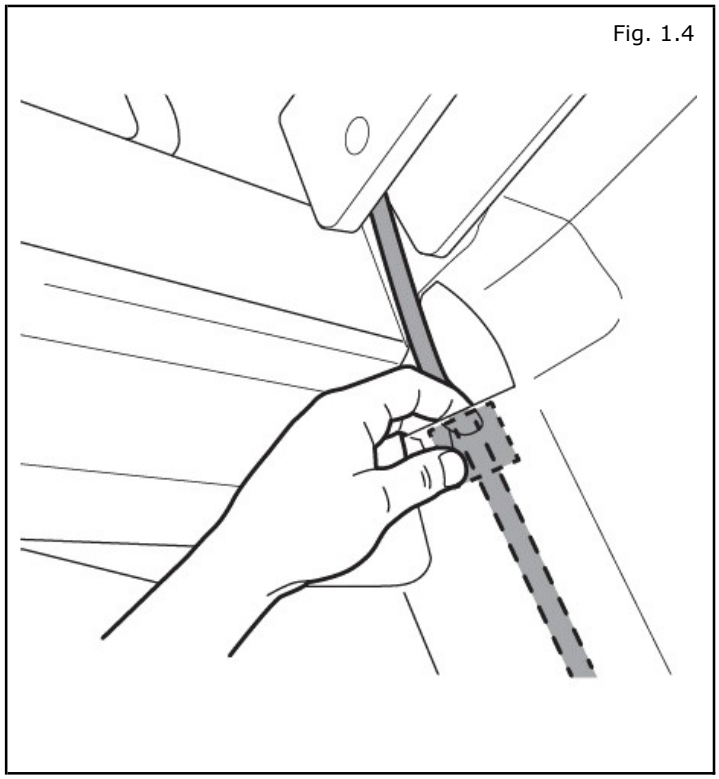
Fig. 1.4

1.4) Secure with adhesive tape

a) Use adhesive tape (item L) to secure harness against the back side of the sheet metal near the top of the opening. Insert the fingers inside hole as much as possible to access the back side of the panel and apply pressure on the tape as shown in Fig. 1.4.

b) Pull the harness from under the vehicle & keep safe for later routing.

INSTALLATION PROCEDURE:

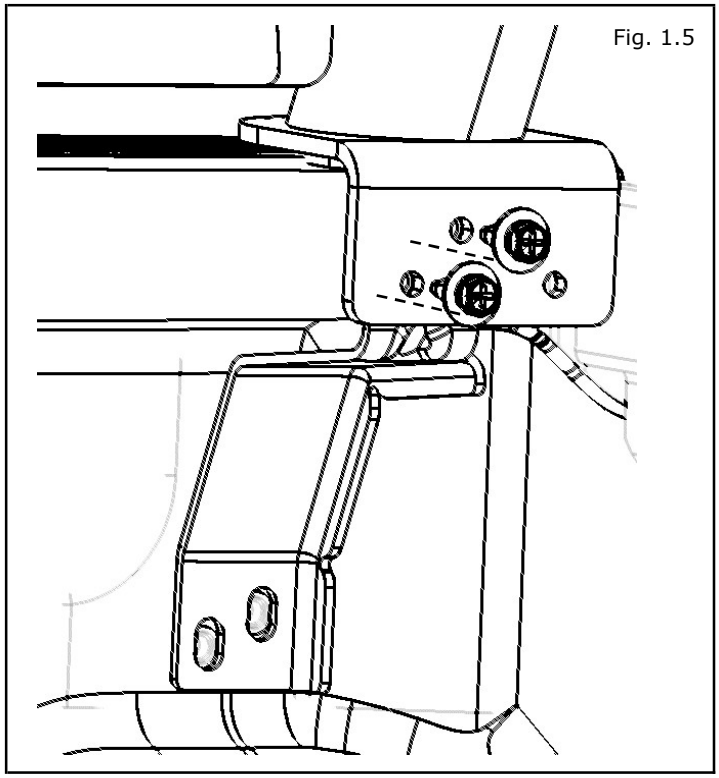
Fig. 1.5

1.5) Connect front brackets to assembly

a) Start on the driver side. Install the left hand bracket (item B) to the Sport Bar bracket by 2 M6X25mm bolts (item G)

b) If needed lift & move the assembly to align the bracket slots to the weld nuts on the body as shown.

c) Tighten 2 M6X25mm (item G) bolts using 10mm socket to 90 in-lbs.

d) Repeat process for passenger side with right hand bracket

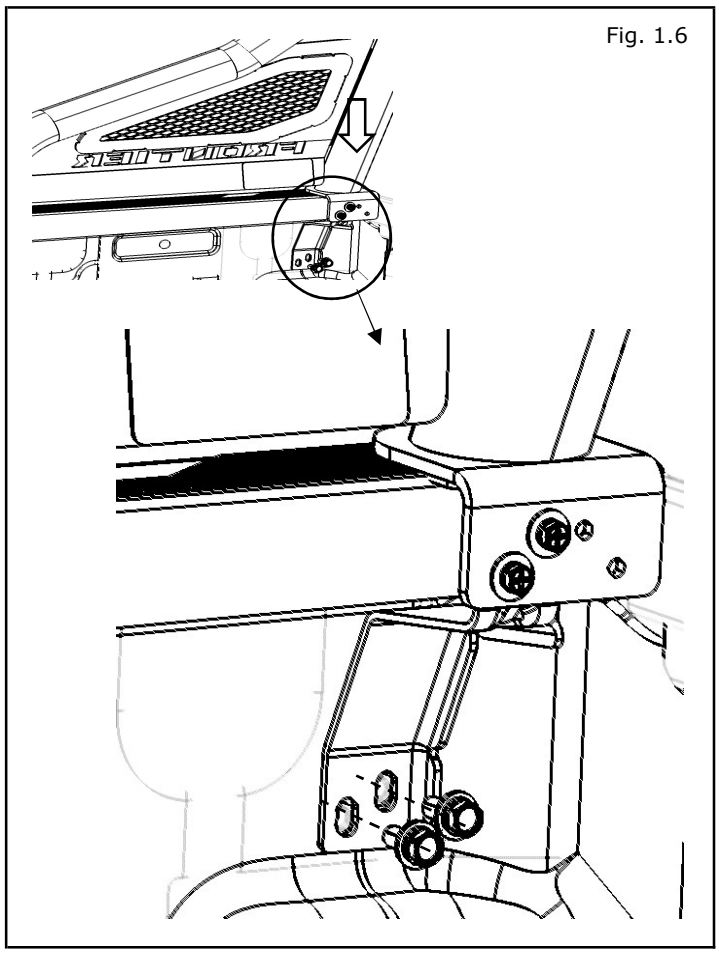
Fig. 1.6

1.6) Attach front brackets to truck bed

a) Start on the driver side, hand start 2 M8X20mm bolts (item H) through the slots into the weld nuts in the bed of the truck.

b) Move assembly to the rear of the truck bed as much as possible

c) Person two push down on assembly and hold, person one use 12mm socket to tighten the 2 M8 bolts to 90 in-lbs.

d) Repeat procedure for passenger side.

INSTALLATION PROCEDURE:

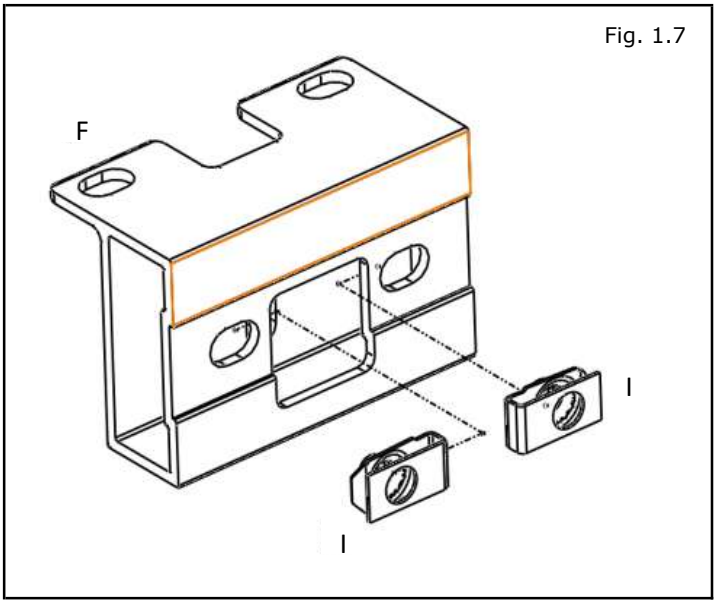

Fig. 1.7

1.7) Sub-assemble rear univeral mounts

Insert qty 2x M6 U-clips (item I) onto each of qty 2 universal rear mounts. These clips must be pressed in from the opening at the center of the mount or else they will not properly install.

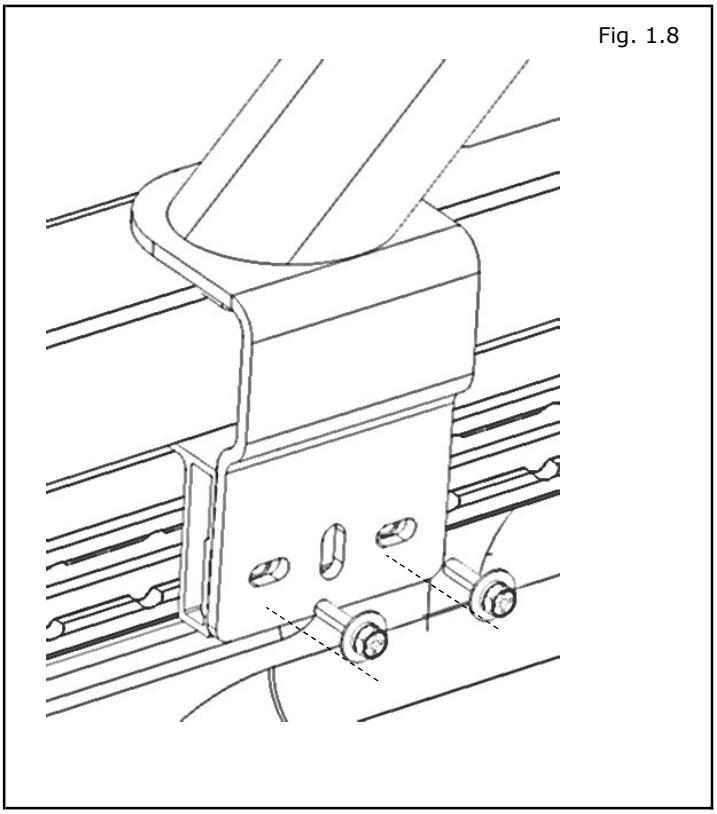
Fig. 1.8

1.8) Assemble rear universal mounts to rear flanges

a) Move to driver side of assembly. Slide sub-assembled rear universal mount behind rear assembly flange as shown.

b) Hand start qty 2 M6X25mm screws (item G) as shown through the flange.

c) Use 10mm socket to tighten M6X25mm screws to 90 in-lbs.

d) Move to passenger side and repeat.

INSTALLATION PROCEDURE:

Fig. 1.9

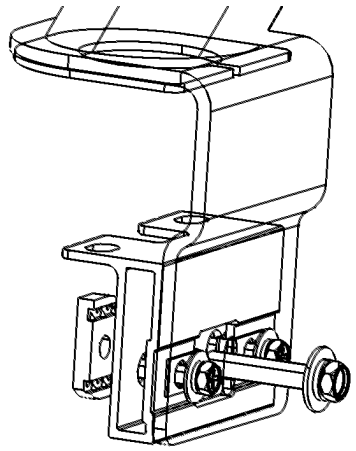

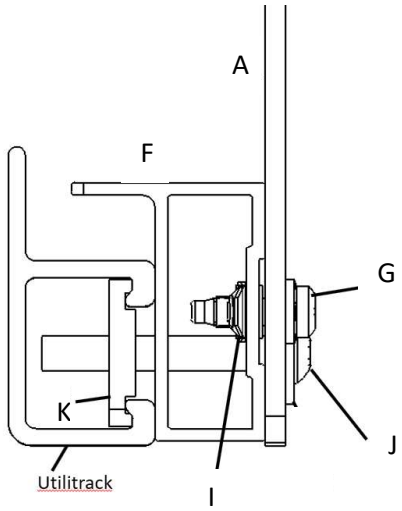

1.9) Attach rear bar on driver side

a) At driver rear of assembly, insert the M8 threaded plate (Item K) into the Utilitrac with the knurled side holding against the track and hold align roughly. Hand tight the long M8 Bolt (Item J).

b) Ensure threaded plate is in track vertically with knurled side towards inside of truck bed.

c) Person two push down on driver rear of assembly and hold, person one use 10mm socket to tighten M8 bolt (item J) to 200 in-lbs.

d) Move to passenger side and repeat.

INSTALLATION PROCEDURE:

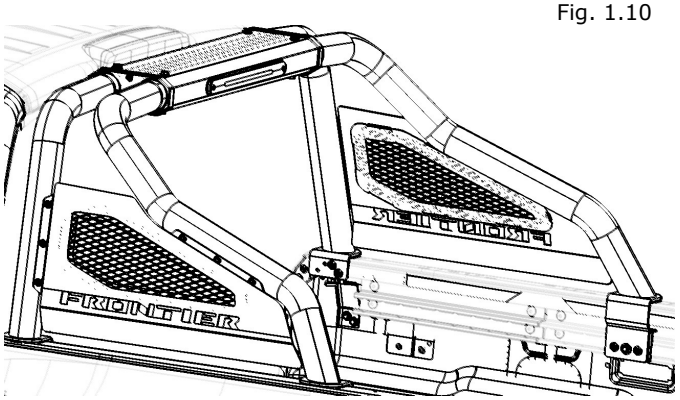

Fig. 1.10

1.10) Check Sport bar installation

Check assembly for any loose components by pushing and pulling on bars from each side front and rear. Verify that no movement occurs.

SECTION 2 - TAIL LAMP REMOVAL

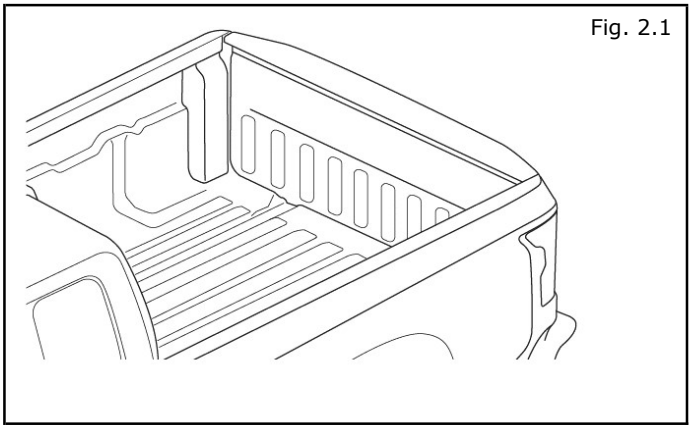

Fig. 2.1

2.1) Open the tailgate.

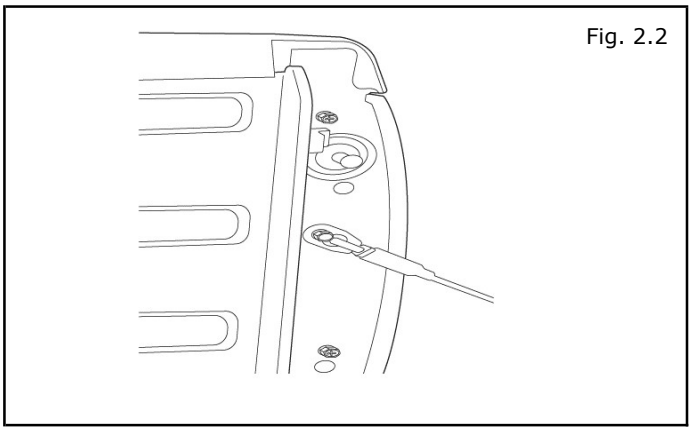

Fig. 2.2

2.2) Locate the two screws to disengage RH tail lights.

a) Using a #3 phillips screwdriver or 10mm socket, remove the two screws.

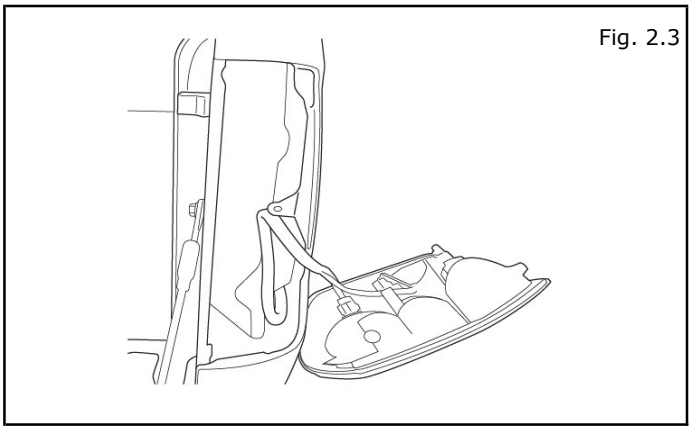

Fig. 2.3

2.3) Disengage RH back tail light

a) Do not disconnect tail light connectors, safely place tail light aside, as shown.

SECTION 3: HARNESS INSTALLATION PROCEDURE

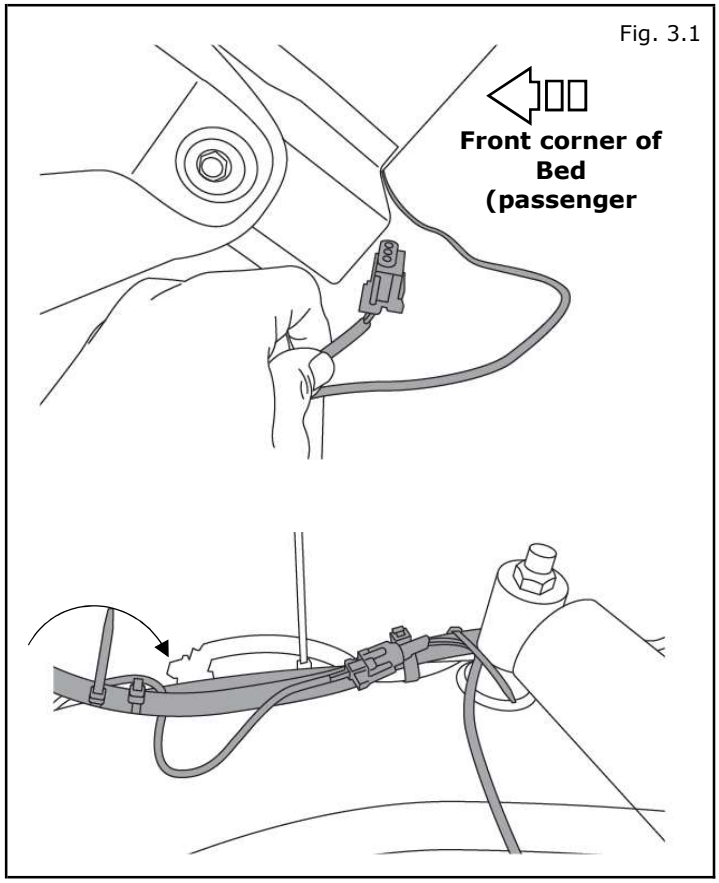

3.1) Pull the 3 pin harness as shown from the Passenger side Front corner of Bed.

Route it over the Chassis long member along the chassis harness as shown.

Connect the 3 pin connector from primary harness (Item N).
Tie strap to the chassis harness on both sides of the connectors to avoid any rattle.

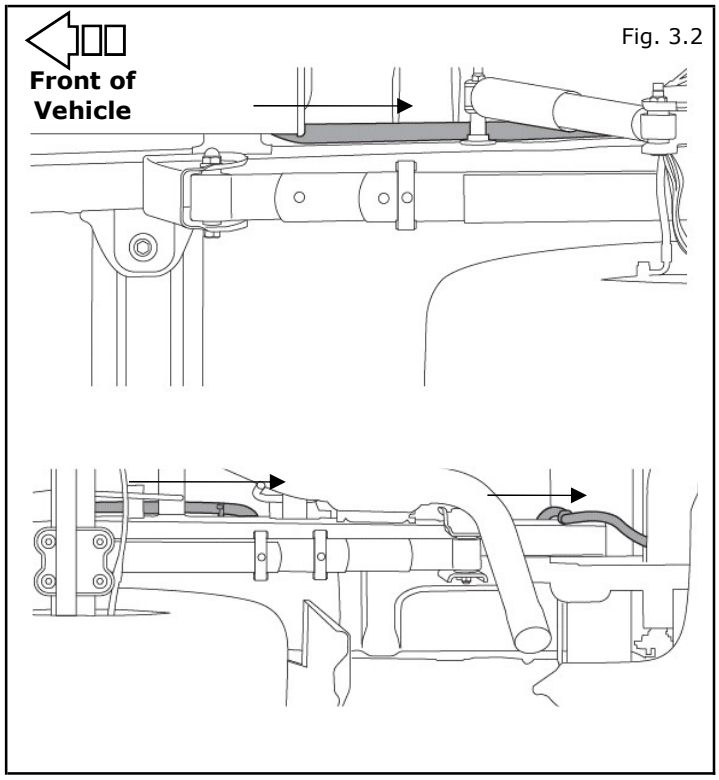

3.2) Follow chassis harness & route the primary harness (Item N) till tail lamp.
Tie strap to the chassis harness along the path after every 150mm.

SECTION 3: HARNESS INSTALLATION PROCEDURE

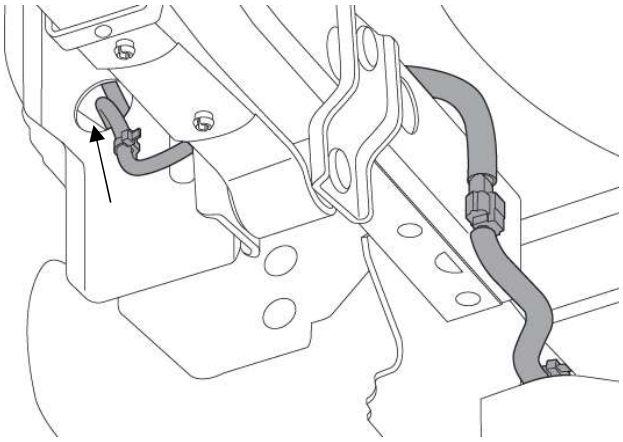

Fig. 3.3

3.3) Follow chassis harness & tail lamp harness through the hole in sheetmetal at tail lamp area as shown.

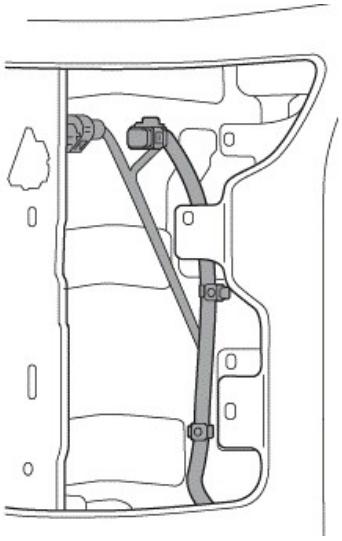

Fig. 3.4

3.4) Pull the 6 pin connectors on primary harness from the hole through the tail lamp area.

Splice the male /female 6 pin connector to the tail lamp 6 pin connector.

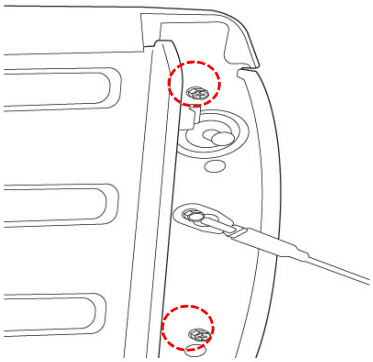

Fig. 3.5

3.5) Reinstall the RH Taillamp

a Align the Taillamp clips and push to engage both the Taillamp clips.
Make sure the harness & connectors are not in the path.

b Reuse the taillamp bolts, tigthen the bottom bolt first & then the top bolt to 53 in-lbs.

SECTION 3: HARNESS INSTALLATION PROCEDURE

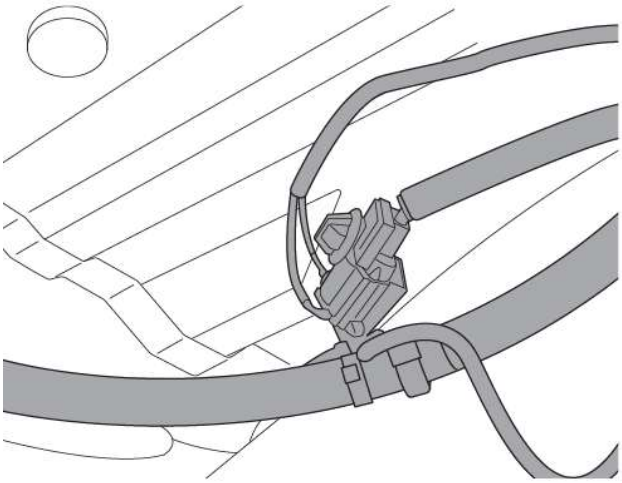

Fig. 3.6

3.6) Locate the Underrail Bedlight harness under the vehicle.

Note: 2 pin black Underrail Bedlight connector is located under the vehicle, exactly below the Bedlight posiition on the Bed.

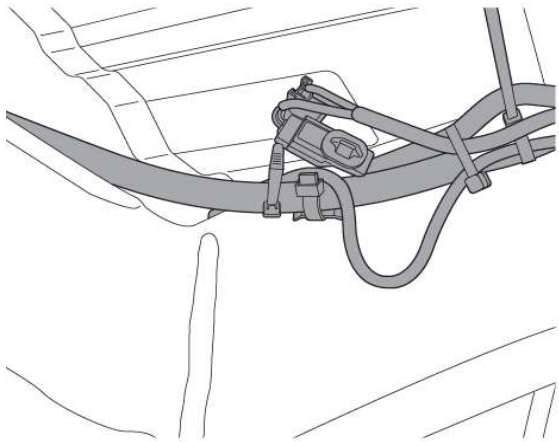

Fig. 3.7

3.7) Splice the pigtail connectors on the Sport bar primary harness, into the Underrail Bedlamp connectors.
Tie strap on both sides of the connectors to make

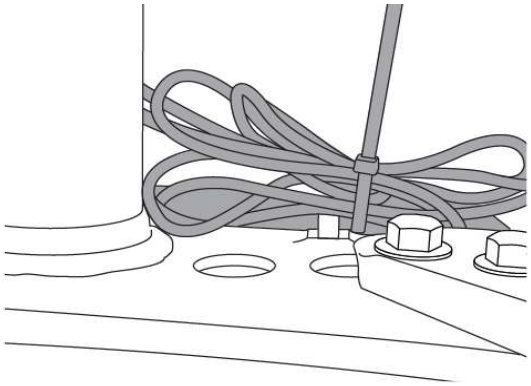

Fig. 3.8

3.8) Tie strap any addiional harness & secure properly to chassis harness.

INSTALLATION PROCEDURE:

CONFIRMATION:

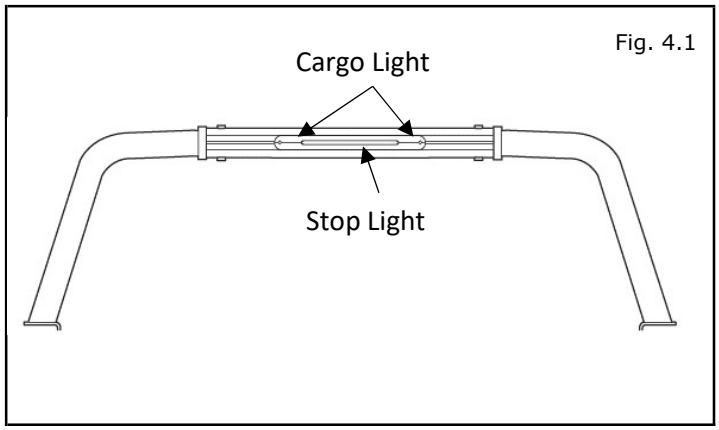

Fig. 4.1

4.1) Turn the vehicle 'ON' to confirm the Stop lamp and the Cargo lamp on the Sport bar functions correctly.