GENUINE PARTS

INSTALLATION INSTRUCTIONS

DESCRIPTION:	**Halogen Fog Lamp + DRL**
APPLICATION:	**Frontier "S and SV grades only"**
PART NUMBER(S) REQUIRED FOR INSTALLATION:	**T99F1 9BU0A**
KIT CONTENTS:	

A

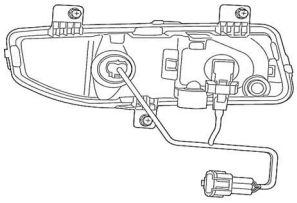

B

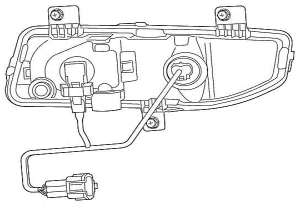

C

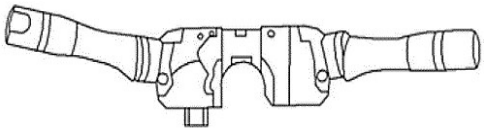

D

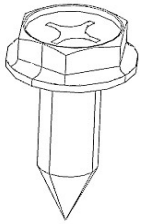

STOP **Important: Read Before Installation!**

Dealer Installation Recommended.

⚠ WARNING

- **To avoid serious personal injury or property damage, obtain Installation Instructions before attempting to install this accessory. The Installation Instructions provide the necessary procedures for a safe installation.**

CUSTOMER INTERNET DOWNLOAD INSTRUCTIONS:
Customers can obtain Installation Instructions for Infiniti or Nissan vehicles at www.Infiniti-Techinfo.com or www.Nissan-Techinfo.com respectively. From the home page, select Accessory Instructions. Select your Model, Model Year, and Accessory Type or search for your Model, and or Model Year, and or Accessory Type including Keyword or Part Number, then locate the Instructions for your accessory.

DEALER ASIST DOWNLOAD INSTRUCTIONS:
Dealership technicians can locate the Installation Instructions for this accessory by scrolling to and select. 'Acc. Install Instructions' tab. Always download and use latest version of the Installation Instructions.

Installation Instructions Replacement Template 999V2 AW000 Rev. 07/12/15

E

PART NUMBER(S) REQUIRED FOR INSTALLATION:

KIT CONTENTS:

Item	Qty.	Part Description	Service Part Number
A	1	Fog Lamp Assembly (RH)	
B	1	Fog Lamp Assembly (LH)	
C	1	COMBI SW (FED AL+FOG)	
D	6	Screw 10 mm	
E	1	Installation Instruction Website Address	

TOOLS REQUIRED:

- Ratchet, 1/4" drive
- Socket, 10mm, 1/4" drive
- Wrench, 10mm
- Screwdriver, Straight 3/8"

INSTALLATION CAUTIONS:

CAUTION

- **Dealer installation recommended. Instructions may refer to Service Manual.**
- **Please read this instruction carefully before installing this product for correct installation.**
- **Please DO NOT use or install the part in ways other than what is described.**
- **Always use floor, seat and steering wheel protection.**
- **Parts utilizing adhesion as method of attachment are to be installed at surface temperature of 15-38° C**
- **Posi-Tap™ instructions must be specifically followed as described in Appendix A.**
- **Apply masking tape as needed to protect areas that may be scratched or damaged by tools.**
- **Always remove vehicle parts in the sequence directed. Improper procedure can damage parts.**
- **Take care not to scratch or damage any component during the removal or re-installation process.**
- **Trim pieces found to have witness marks or broken clips ARE NOT to be reinstalled.**
- **Store removed parts in a safe manner.**
- **If a problem occurs during installation, please contact Nissan dealer where product was purchased.**

SECTION 1 - OVERVIEW

1.1) SYSTEM

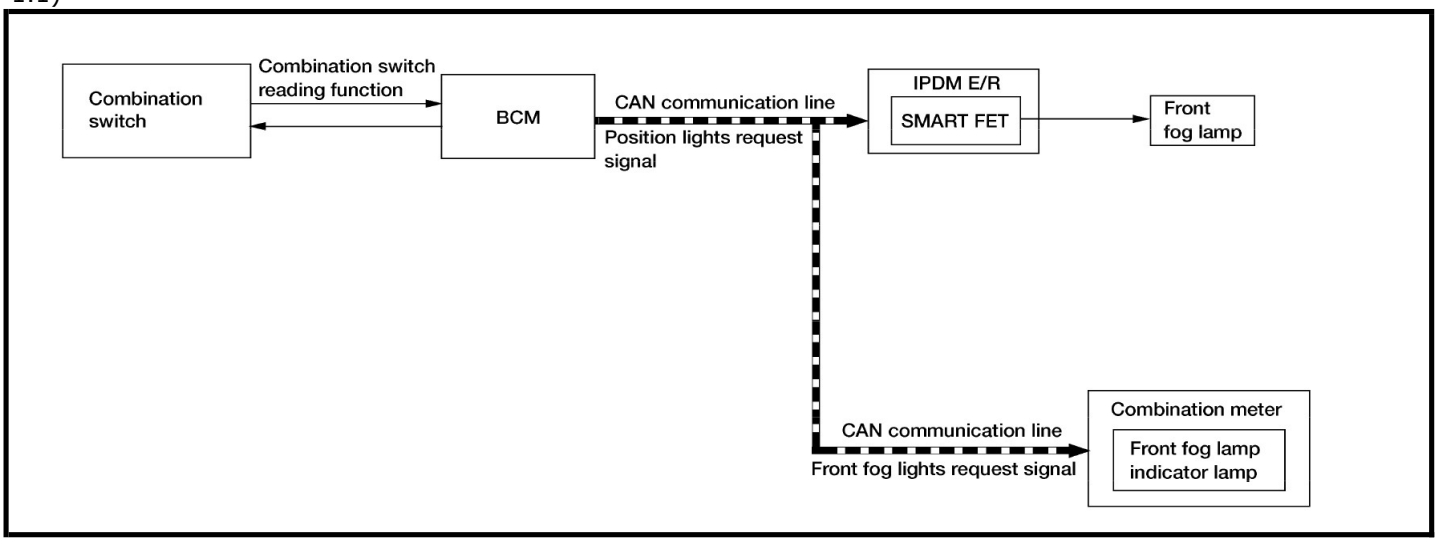

1.2) VEHICLE

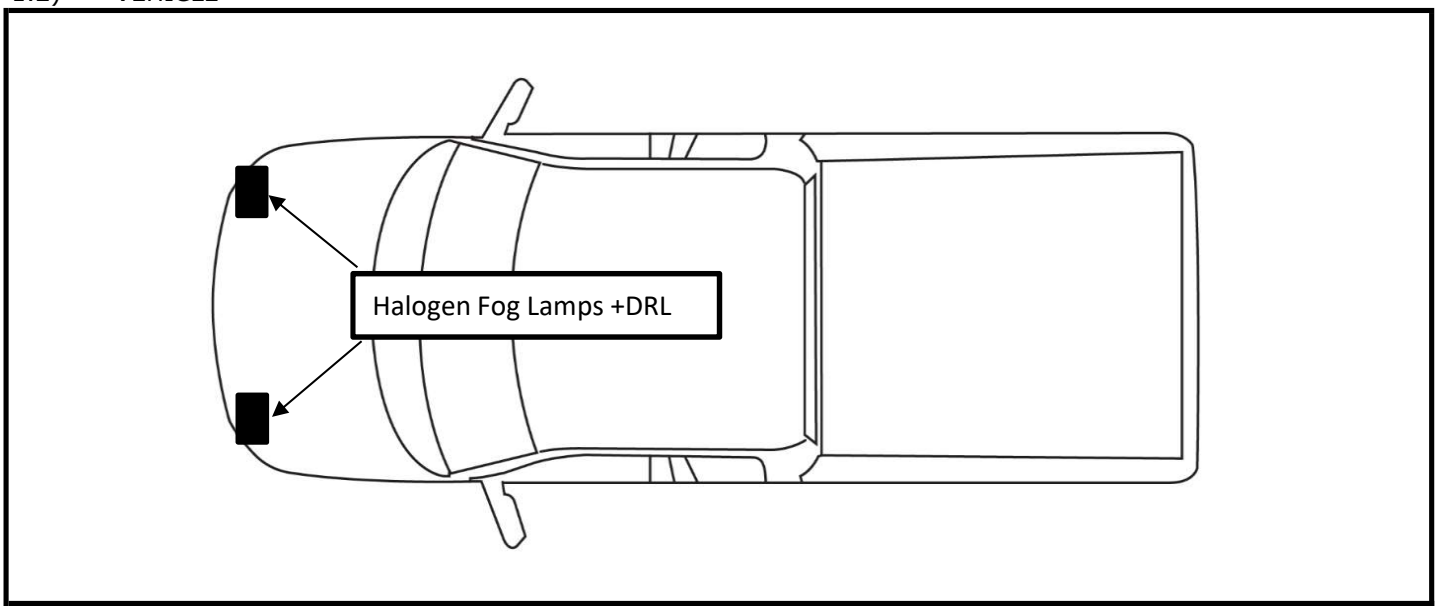

CAUTION

- **Always confirm the ignition is in the "OFF" position before changing the E.S.S. position.**
- **If E.S.S. is not in Customer Mode, there will be a loss of normal vehicle operation, preventing accessory function check.**

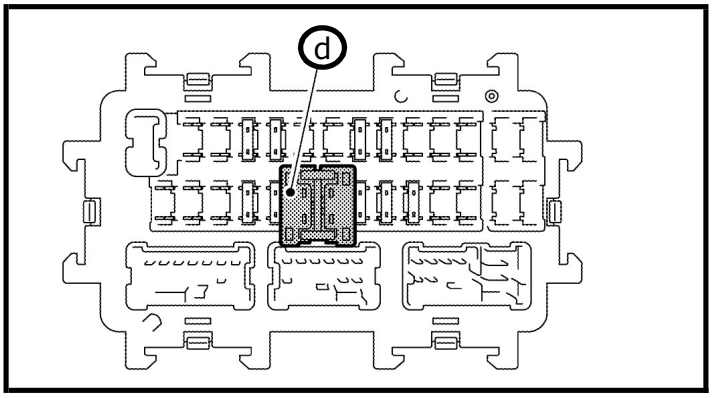

2.1) Check Extended Storage Switch Position

a) Put shift lever in "P" position for A/T and CVT or "1st" for M/T .

b) Apply park brake.

c) Place ignition in "OFF" mode.

d) Locate Extended Storage Switch in cabin fuse block as shown.

e) Confirm Extended Storage Switch is in "Customer" (In/Engaged) position.

f) If ESS is not In/Engaged, then proceed to step 2.2 .

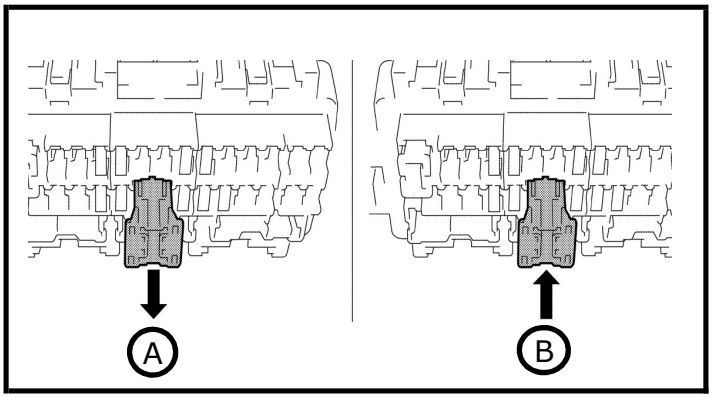

2.2) Changing ESS Position

a) To disengage Customer Mode, pull out in **A** direction as shown.

b) To engage Customer Mode, press in **B** direction as shown.

Condition	Switch Position	Note
Vehicle is delivered to the dealer	Transit (OUT)	
Vehicle is being stored at the dealer	Transit (OUT)	
Vehicle is delivered to customer	Customer (IN)	

2.3) Record Customer Presets

a) Place ignition in "ON" mode.

b) Record the customer radio presets and other presets as required.

Preset	1	2	3	4	5	6	7	8	9	10

c) Place ignition in "OFF" mode.

⚠ WARNING

- **Follow all cautions and warnings in these Installlaion Instructions. Failure to do so could result inserious personal injury.**
- **To avoid rendering the SRS inoperative, which could increase the risk of personal injury or death inthe event of a collision which would result in air bag inflation, all maintenance must be performed by an authorized NISSAN/INFINITI dealer.**
- **Improper maintenance, including incorrect removal and installation of the SRS, can lead to personal injury caused by unintentional activation of the system. For removal of Spiral Cable and Air Bag Module, see the SR section of the Service Manual.**
- **Do not use electrical test equipment on any circuit related to the SRS. SRS wiring harnesses can be identified by yellow and/or orange harnesses or harness connectors.**
- **Before servicing the SRS, turn ignition switch OFF, disconnect both battery cables and wait three minutes. For approximately three minutes after cables are removed, it is still possible for air bag and seat belt pre-tensioner to deploy. Therefore, do not work on any SRS connectors or wires until at least three minutes have passed.**
- **The spiral cable must be aligned with the neutral position since its rotations are limited. Do not turn steering wheel and column after removal of steering gear.**
- **Handle air bag module carefully. Always place driver and front passenger air bag modules with the pad side facing upward and the seat mounted front side air bag module standing with the stud bolt side facing down.**
- **Always work from the side of air bag module, NEVER work in front of it.**
- **Allow 3 min after key off and doors closed for vehicle to time out.**
- **Before servicing the SRS, turn ignition switch OFF, disconnect battery negative terminal and wait at least three minutes**

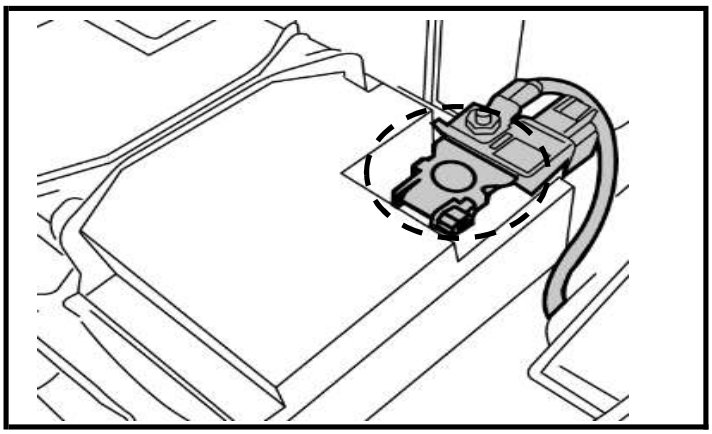

2.3) Battery terminal removal.
- a) Locate negative battery terminal.
- b) Loosen nut with 10mm socket.

Battery Terminal Nut

⚠ WARNING

- **Allow 3 min after key off with doors closed for vehicle power to time out.**

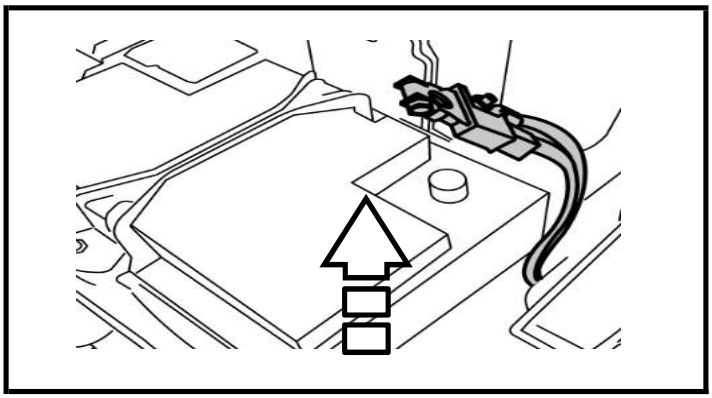

2.4) Battery terminal removal.
- a) Lift negative battery terminal off nut.
- b) Isolate negative battery terminal.

⚠ WARNING

- **Allow 3 min after key off with doors closed for vehicle power to time out.**

SECTION 3 - TRIM REMOVAL, EXTERIOR

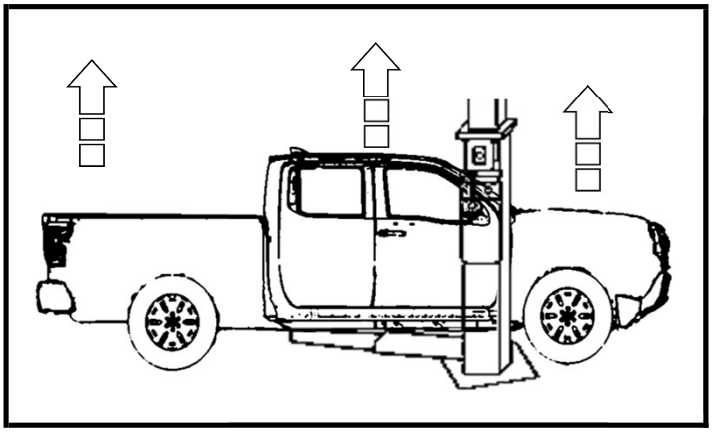

3.1) Removing airbox assembly.

a) Locate lift points, set hoist arms and raise vehicle to necessary work height.

WARNING

- **Always use proper lift points as specified in Service Manual Section: GI**
- **Be sure vehicle is secure on locks before proceeding underneath.**

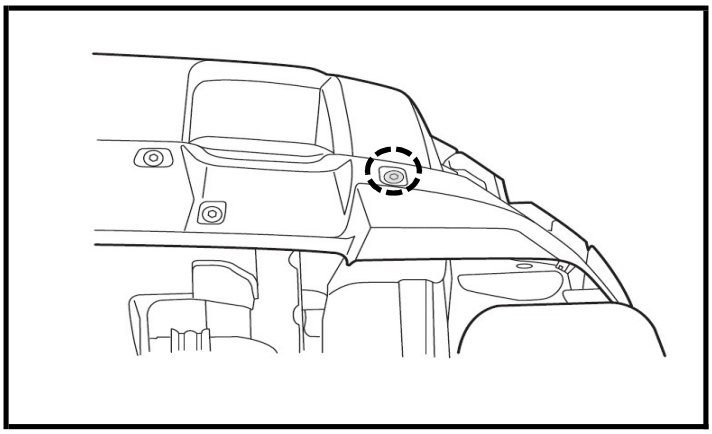

3.2) Remove front under cover bolts

a) Using a Socket, 10mm, 1/4" drive remove the bolt on (LH and RH).

Bolts

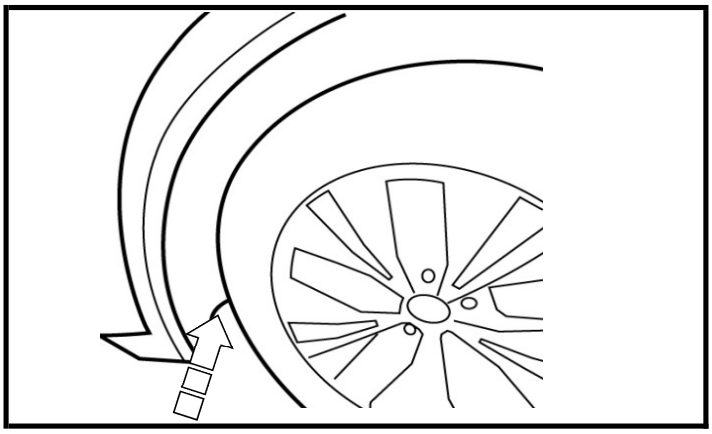

3.3) Move wheel.

a) If you are working on RH side, move the wheel to LH side to have enough clearance.

b) If you are working on RH side, move the wheel to LH side to have enough clearance.

Remove fender

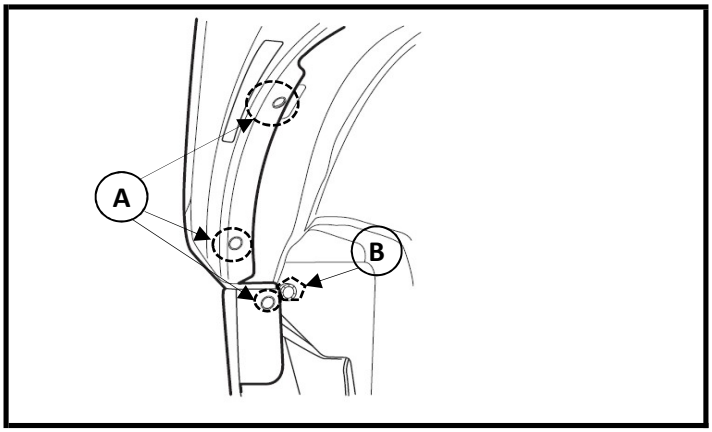

3.4) Remove fender protector.

a) Using Phillips Screwdriver, remove fender protector screws clips (A) (LH and RH).

b) Remove fender protector fixing clips (B) (LH and RH).

Bolts

Trim Clip

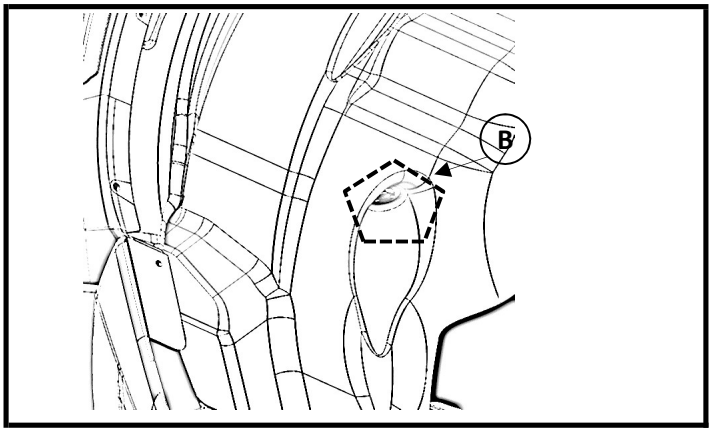

3.5) Remove fender protector LH and RH side.

a) Remove fender protector fixing clips (B) (LH and RH) located on inside the fender protector.

Trim Clip

3.6) Remove fender protector LH and RH side.

a) Pull fender back by hand to the extent that it will not break.

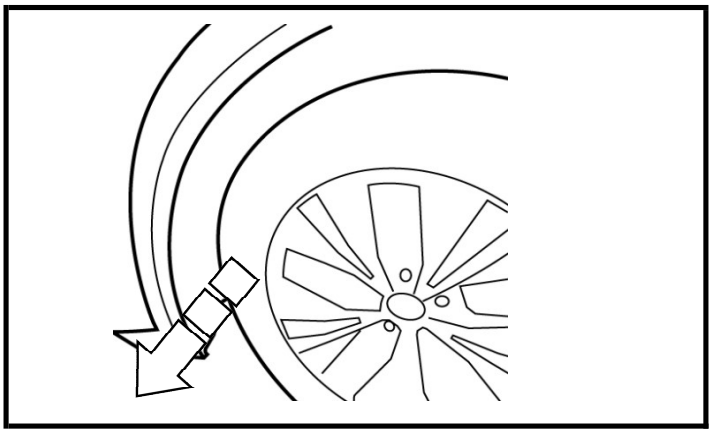

3.7) Move wheel .

a) If you are working on RH side, move the wheel to RH side to have enough clearance.

b) If you are working on LH side, move the wheel to LH side to have enough clearance.

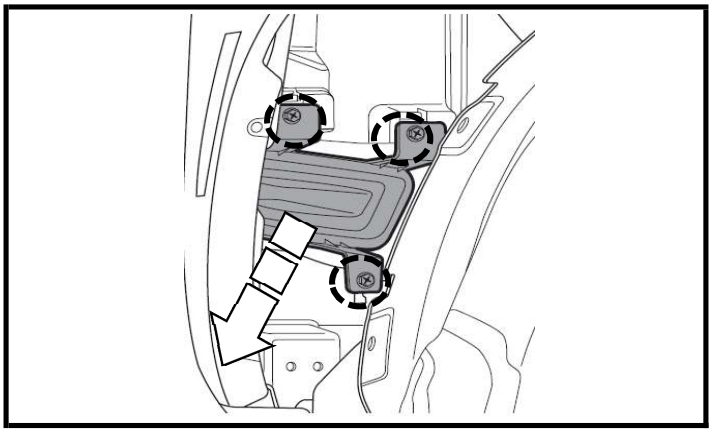

3.8) Remove Fog lamp finisher, (LH and RH side).

a) Using a Socket, 10mm, 1/4" drive remove the Three bolts on (LH and RH) of the fog lamp finisher.

Bolts

SECTION 4 - FOG LAMPS INSTALLATION

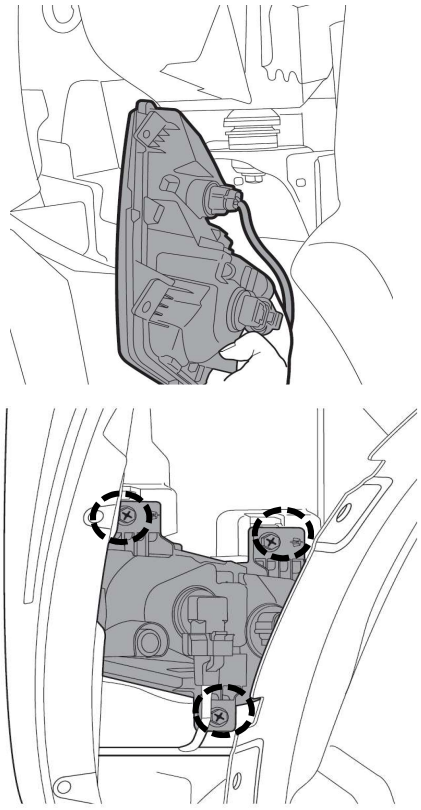

4.1) Installing the LH fog lamp assy.

a) Install fog lamp assembly into fascia and secure with three (3) 10mm bolts.

Bolts

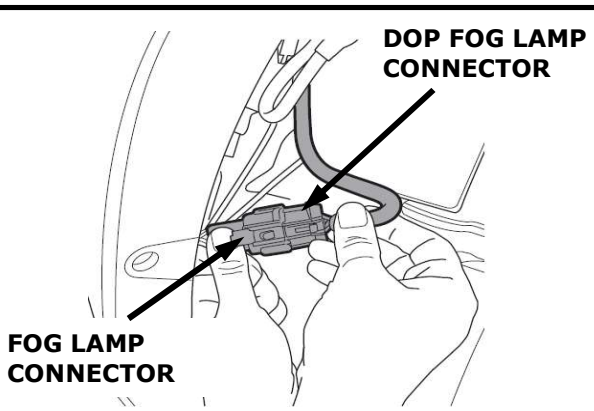

4.2) Connecting pre wire to fog lamp assembly.

a) Locate pre-wire harness connector inside of fascia it is taped just front of the fog lamp assembly. Carefully cut TA-T tape holding connector and pull it down.

b) Connecting pre-wire to fog lamp connector.

Connect

CAUTION

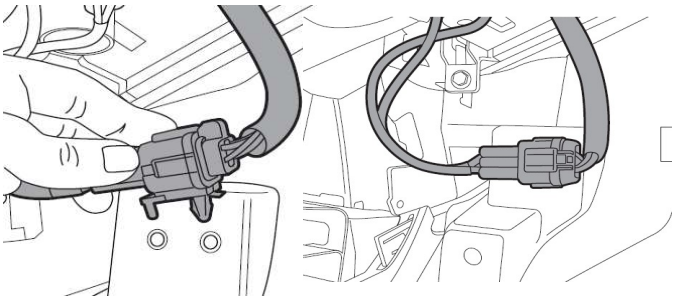

4.3) Attach the connector

a) Locate the 2 holes on the front bumper bracket and attach the connection fog lamp.

4.4) Installing the LH fog lamp assy.

a) Repeat steps 4.1 - 4.3 or LH side of RH vehicle.

SECTION 5 - COMBY SWITCH INSTALLATION

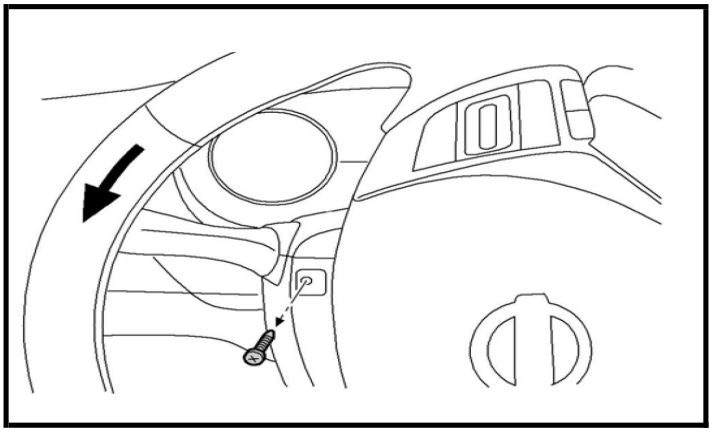

5.1) Removing steering column finisher.

a) Rotate the steering wheel counterclockwise to access left steering column cover screw.

b) Remove one (1) Philips head screw as shown.

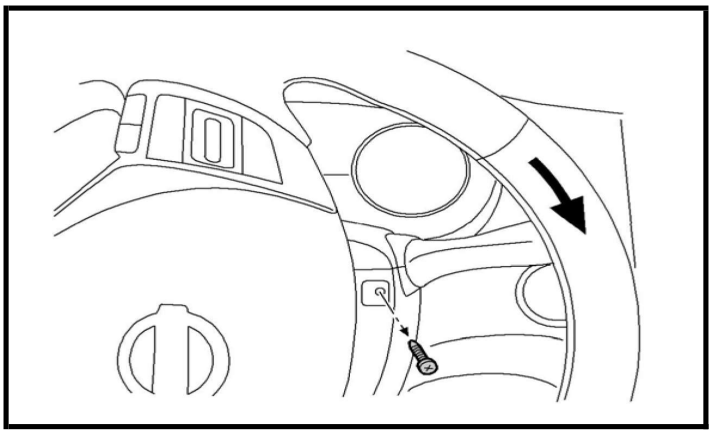

5.2) Removing steering column finisher.

a) Rotate the steering wheel clockwise to access right steering column cover screw.

b) Remove one (1) Philips head screw as showing.

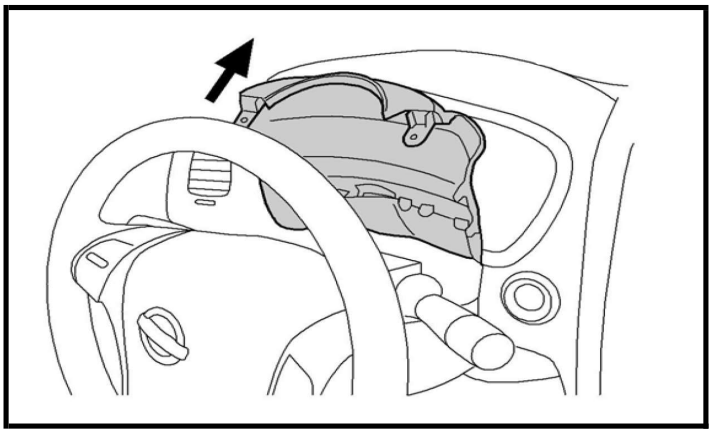

5.3) Removing steering column finisher.

a) Carefully pry upper steering finisher off steering column as showing.

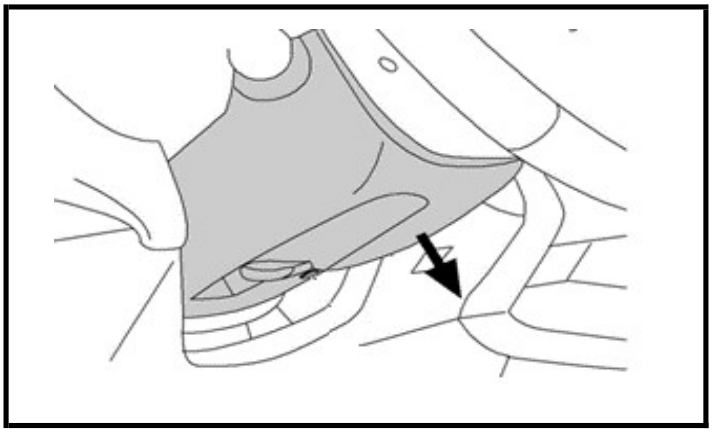

5.4) Removing combination switch.

a) Remove one (1) Philips screw from lower steering finisher.

SECTION 5 - COMBY SWITCH INSTALLATION

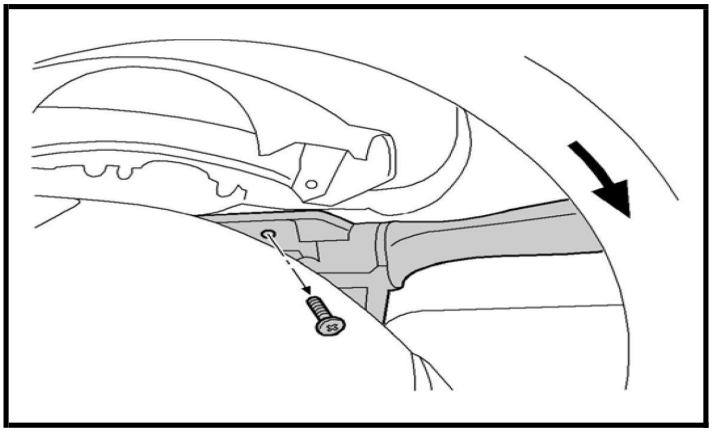

5.5) Removing combination switch.

a) With steering wheel turned to right, use a phillips head screwdriver to remove one (1) combination switch mounting screw as showning.

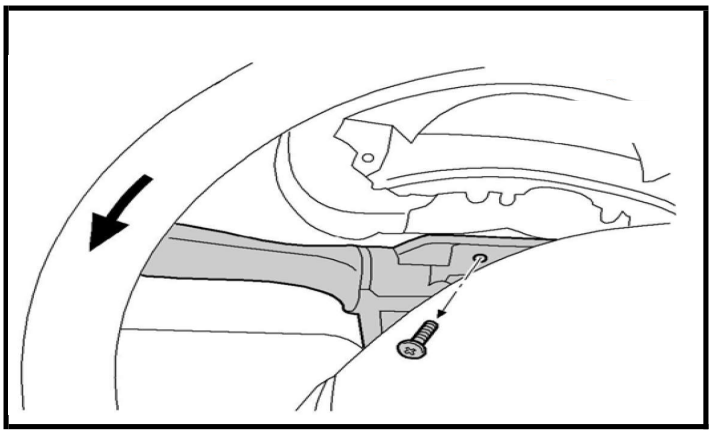

5.6) Removing combination switch.

a) Rotate the steering wheel counterclockwise and remove one (1) combination switch mounting screw on the left as showing

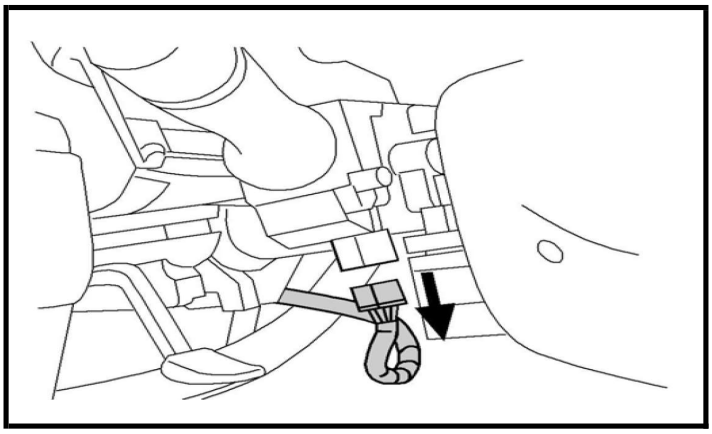

5.7) Removing combination switch.

a) Locate combination switch connector on underside of steering column and disconnect as showing.

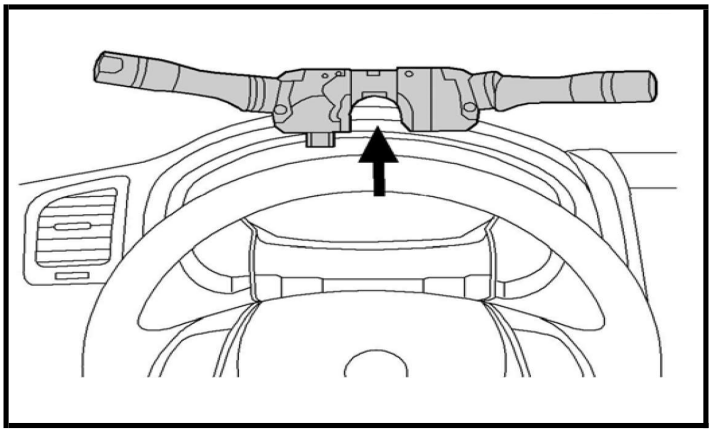

5.8) Removing combination switch.

a) Remove combination switch by lifting up and out of steering column as showing.

SECTION 5 - COMBY SWITCH INSTALLATION

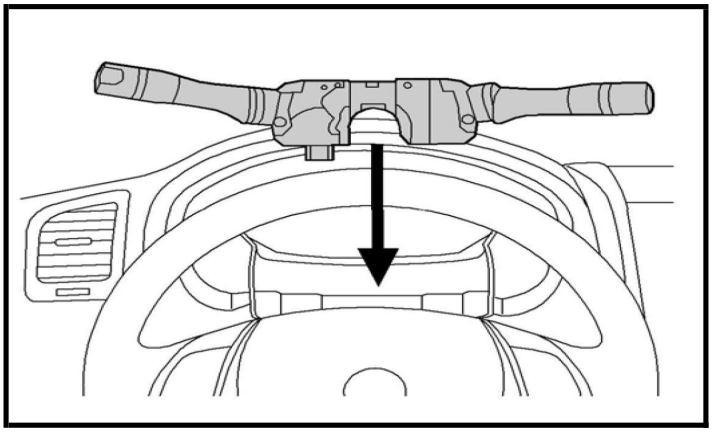

5.9) Installing combination switch.

a) Install the new combination switch supplied with kit using original mounting screws as shown

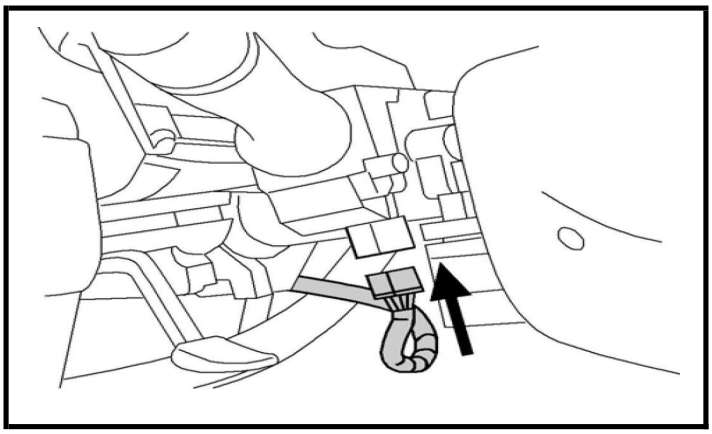

5.10) Installing combination switch.

a) Install connector into new combination switch as showing.

SECTION 6 - FIN

6.1) Re-install trim

a) Re-install interior trim that was removed in Section 3-2

⚠ CAUTION

- **If necessary perform Fog Lamp Aiming Adjustment Procedure exactly as directed in Service Manual, Sect L - Driver Controls: FRONT FOG LAMP AIMING ADJUSTMENT.**
- **Make sure all electrical connectors are engaged and locked before proceeding with accessory check.**
- **Make sure no system malfunction is detected by air bag warning lamp.**
- **If a malfunction is detected, reset by self-diagnosis function and delete code using CONSULT III+.**

6.2) Complete checklist:

- ☐ Connect the battery negative terminal and tighten the nut to 5.4 N-m (47.8 lb-in).
- ☐ Push the ignition button to the ACC position.
- ☐ Turn headlamp and fog lamp switches to the ON position.
- ☐ Verify headlamps, fog lamps and tail lamps are illuminated.
- ☐ Verify headlamps and fog lamp indicators are illuminated on the meter assembly.
- ☐ Verify turn signal, hazard and high beam functionality.
- ☐ Verify turn signal, hazard and high beam indicators are illuminated on the meter assembly.
- ☐ Verify turn wiper and washer functionality.
- ☐ Turn headlamp switch to the OFF position, leaving the fog lamp switch in the ON position.
- ☐ Verify both headlamp and fog lamps turn off.

⚠ CAUTION

- **If necessary perform Fog Lamp Aiming Adjustment Procedure exactly as directed in Service Manual, Sect L - Driver Controls: FRONT FOG LAMP AIMING ADJUSTMENT.**
- **Make sure all electrical connectors are engaged and locked before proceeding with accessory check.**
- **Make sure no system malfunction is detected by air bag warning lamp.**
- **If a malfunction is detected, reset by self-diagnosis function and delete code using CONSULT III+.**

6.2) Complete checklist:

- ☐ Connect the battery negative terminal and tighten the nut to 5.4 N-m (47.8 lb-in).
- ☐ Verify re-installed trim parts for proper fit (no gap, waviness, etc.), particularly the door sill weather
- ☐ Verify all windows and sunroof (if equipped), one touch operation and perform the reset procedure if necessary. Refer to the vehicle Service Manual for more details.
- ☐ Re-program radio presets and other vehicle settings to the recorded settings if necessary.
- ☐ If this vehicle will be returned to a dealer lot or showroom for an extended period of time, be sure the Extended Storage Switch is placed in the Transit position. See step 2.2 .
- ☐ Remove all tools, templates, and other debris from interior of vehicle.
- ☐ Verify vehicle headliner, seat, steering wheel, center console, carpet, etc. are not soiled.
- ☐ Verify interior and exterior are not damaged.

FINAL INSPECTION:

⚠ CAUTION

Take care not to scratch or damage any component during the removal or re-installation process. Trim pieces found to have witness marks or broken clips should be replaced with new parts.

- ☐ Inspect the installation area for any debris.
- ☐ Verify re-installed trim parts for proper flush fit (no gaps, no waviness, etc.).
- ☐ Verify all clips are fully engaged and locked.
- ☐ Verify re-installed trim parts are free from cracks, scratches or stress marks.
- ☐ Verify vehicle headliner, seat, steering wheel, center console, floor carpets, etc. are not soiled.
- ☐ Verify interior and exterior is not damaged.